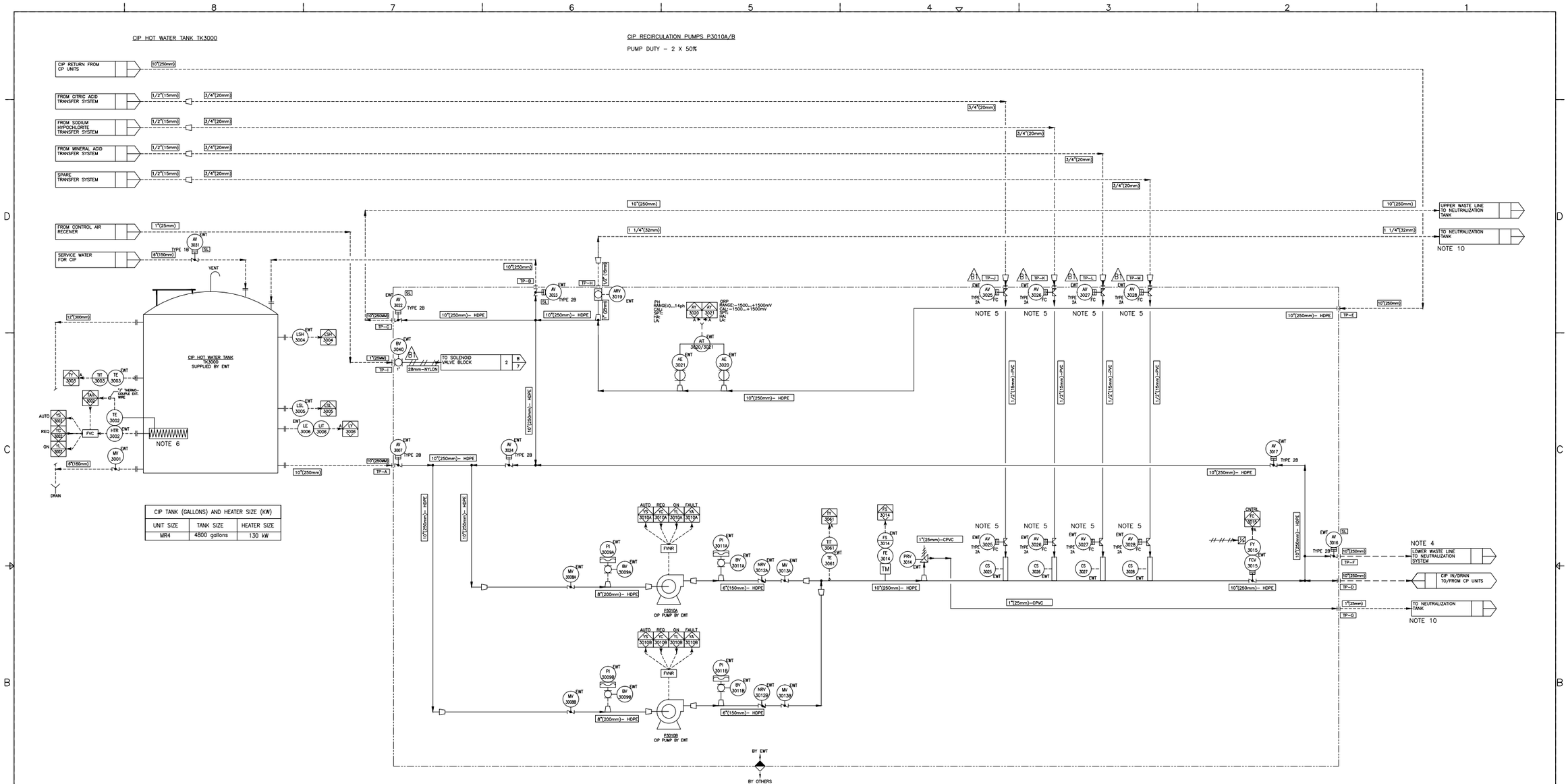

CIP TANK (GALLONS) AND HEATER SIZE (KW)		
UNIT SIZE	TANK SIZE	HEATER SIZE
MR4	4800 gallons	130 kW

CIP PUMPS 2 x 50%				
PUMP	FLOW (GPM)	PRESSURE (FT)	MOTOR (hp)	MODEL
P3010A	740 GPM	62 FT	25hp	CRN 150–1–1
P3010B	740 GPM	62 FT	25hp	CRN 150–1–1

B1

TABLE 1 TERMINATION POINTS			
LABLE	DESCRIPTION	SIZE – INCHES (mm)	CONNECTION TYPE
TP–A	CIP TANK OUTLET	10" (250mm)	FLANGE ANSI DRILLED
TP–B	CIP TANK RETURN	10" (250mm)	FLANGE ANSI DRILLED
TP–C	CIP RETURN TO NEUTRALIZATION	10" (250mm)	FLANGE ANSI DRILLED
TP–D	CIP SUPPLY TO UNITS	10" (250mm)	FLANGE ANSI DRILLED
TP–E	CIP RETURN FROM UNITS	10" (250mm)	FLANGE ANSI DRILLED
TP–F	CIP UNIT DRAIN TO NEUTRALIZATION	10" (250mm)	FLANGE ANSI DRILLED
TP–G	CIP RELIEF VALVE DRAIN	1" (25mm)	SOCKET UNION
TP–H	CIP AIR RELEASE VALVE DRAIN	1/2" (15mm)	THREADED NPTF (BSP)
TP–I	CONTROL AIR INLET	1" (25mm)	THREADED BSP B1
TP–J	CIP CITRIC ACID SUPPLY	3/4" (20mm)	THREADED NPTF (BSP)
TP–K	CIP HYPOCHLORITE SUPPLY	3/4" (20mm)	THREADED NPTF (BSP)
TP–L	CIP MINERAL ACID SUPPLY	3/4" (20mm)	THREADED NPTF (BSP)
TP–M	CIP SPARE CHEMICAL SUPPLY	3/4" (20mm)	THREADED NPTF (BSP)

TYPICAL VALVE CONTROL

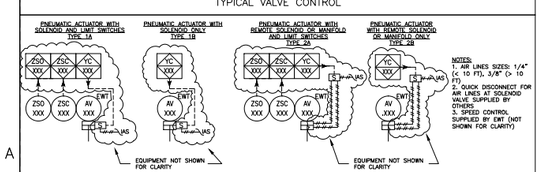

NOTES:
1. AIR LINES SIZES: 1/4" (< 10 FT), 3/8" (> 10 FT)
2. QUICK DISCONNECT FOR AIR LINES AT SOLENOID VALVE SUPPLIED BY OTHERS
3. SPEED CONTROL SUPPLIED BY EWT (NOT SHOWN FOR CLARITY)

NOTES:
1– EQUIPMENT MARKED WITH "EWT" IS SUPPLIED BY EVOQUA WATER TECHNOLOGIES FOR INSTALLATION BY OTHERS.
2– ALL INTERCONNECTING PIPEWORK (EXCEPT WHEN INDICATED) IS SUPPLIED BY OTHERS.
3–INSTRUMENTS 24VDC UNLESS OTHERWISE INDICATED
4–PROVIDE SLOPE TO DRAIN THE LINE IF WASTE COLLECTION BELOW GRADE. PROVIDE POSITIVE AIR BREAK OR OPEN (FREE) DISCHARGE FOR SELF DRAINING. ENSURE NO BACKPRESSURE IN LINE.
5–TYPE 2A FAILED CLOSE VALVE WITH CLOSE LIMIT SWITCH ONLY.
6–CIP WATER STORAGE TANK HEATER NOT USUALLY REQUIRED WHERE THE MINIMUM WATER TEMPERATURE IS GREATER THAN 77 °F (25 °C)
7–CIP MAKE–UP WATER SHOULD BE THE BEST QUALITY AVAILABLE EXTERNAL CIP MAKE–UP WATER CONNECTION IS USUALLY ONLY REQUIRED WHEN CP UNIT FILTRATE DOES NOT MEET QUALITY REQUIREMENTS TYPICALLY – Si < 15 PPM, TOTAL HARDNESS < 150 mg/l AND CONDUCTIVITY < 1000 µS/cm. WHERE FILTRATE QUALITY DOES NOT MEET GUIDELINES, BETTER QUALITY WATER SUCH AS TOWNS WATER OR RO PERMEATE SHOULD BE USED FOR CIP MAKE–UP
8–POWER SUPPLY TO INSTRUMENTS REQUIRING SEPARATE POWER SUPPLY IS PROVIDED BY OTHERS.
9–MCC AND VFD(S) SUPPLIED BY OTHERS.
10–AIR RELIEF AND RELEASE VALVE PIPED SEPARATELY TO NEUTRALIZATION SYSTEM
11– CIP TANK SIZED TO SUIT STANDARD ARRANGEMENT. SKID AND TANK LOCATED 3 FT FROM CPII UNITS. IF DISTANCE GREATER ACTUAL VOLUME MAY CHANGE FOR PROJECT.
12– TANK VOLUMES GIVEN AS TOTAL TANK VOLUME INCLUDING DOME LID.

UK./AUS	U.S.A.	DESCRIPTION	DATE	DWN	CHKD	APVD	ECN
B	1	AS PER ECR MGSECR–90 MARKUPS	07/30/14				MGS–90
A	0	ORIGINAL ISSUE					

COMPANY CONFIDENTIAL
THIS DOCUMENT AND ALL INFORMATION CONTAINED HEREIN ARE THE PROPERTY OF EVOQUA AND/OR ITS AFFILIATES. THE DESIGN CONCEPTS AND INFORMATION CONTAINED HEREIN ARE PROPRIETARY TO EVOQUA AND ARE SUBMITTED IN CONFIDENCE. THEY ARE NOT TRANSFERABLE AND MUST BE USED ONLY FOR THE PURPOSE FOR WHICH THE DOCUMENT IS EXPRESSLY LOANED. THEY MUST NOT BE DISCLOSED, REPRODUCED, LOANED OR USED IN ANY OTHER MANNER WITHOUT EXPRESS WRITTEN CONSENT OF EVOQUA. IN NO EVENT SHALL THEY BE USED IN ANY MANNER DETRIMENTAL TO THE INTEREST OF EVOQUA. PATENT RIGHTS ARE RESERVED. UPON THE REQUEST OF EVOQUA, THIS DOCUMENT, ALONG WITH ALL COPIES AND EXTRACTS, AND RELATED NOTES AND ANALYSES, MUST BE RETURNED TO EVOQUA OR DESTROYED, AS INSTRUCTED BY EVOQUA. ACCEPTANCE OF THIS DELIVERY OF THIS DOCUMENT CONSTITUTES AGREEMENT TO THESE TERMS AND CONDITIONS. © EVOQUA 2014

DRAWN	ST	DATE 04/03/2014
CHECKED	JNR	DATE 04/08/2014
APPROVED	ST	DATE 04/08/2014

TITLE MEMCOR CPIIMR4 CLEAN–IN–PLACE SYSTEM PROCESS AND INSTRUMENTATION DIAGRAM B1

CLIENT MEMCOR GLOBAL STANDARD

EVOQUA WATER TECHNOLOGIES
U.S.A. 55 TECHNOLOGY DRIVE, SUITE 201 LOWELL, MA 01851–5203 1–800–636–2674 (1–800–MEMCOR4)
AUSTRALIA 1 MEMTEC PARKWAY, SOUTH WINDSOR, NSW2756
U.K. OUTRAMS WHARF, LITTLE EATON, DERBY, ENGLAND DE21 5EL TEL +44(0)1332 387300

DO NOT SCALE ALL DIMENSIONS IMPERIAL

SCALE	PROJECT	DRAWING	SHEET	STATUS
NTS	MGS9207	MGS92070005–FD	1 OF 2	REL